Baumer
Passion for Sensors

Technical Data
VCXG-125C.R

Digital Color Matrix Camera, 12 Megapixel, GigE
Article No. 11175752
Firmware Revision 3.0

Sensor Graph: Relative Response

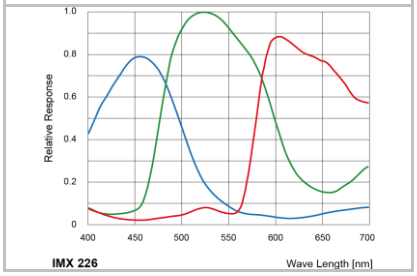

Frame Rates / Partial Scan
(Measured at Mono8/BayerRG8-Format)

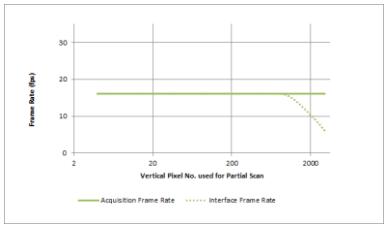

Digital Output: High Active

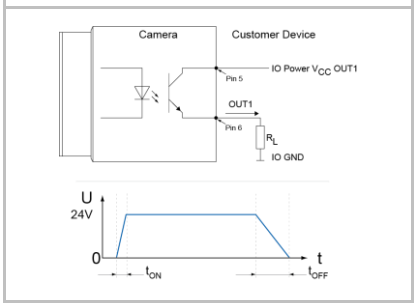

Sensor Information

Model Name	Sony IMX226
Type	1/1.7″ progressive scan CMOS
Shutter	Rolling Shutter, Global Reset Shutter
Resolution	4000 × 3000 pixels
Scan Area	7.4 mm x 5.55 mm
Pixel Size	1.85 µm x 1.85 µm

Data Quality

@ 20 °C, gain = 1, exposure time = 4 msec

Dark Noise (σ)	3 e- typical
Saturation	10000 e- typical
Dynamic Range	70 dB typical
SNR	40 dB typical
Quantum efficiency η	59 % @ 465 nm, 64 % @ 536 nm, 46 % @ 631 nm typical

Acquisition

Resolution	4000 px x 3000 px		
Interface Frame Rate (depends on used interface performance)	Format	Resolution	max. Frame Rate (@ Trigger Mode) [2]
	Full Frame	4000 x 3000	10 fps
	Binning 2x2	2000 x 1500	15 fps
	Binning 2x1	2000 x 3000	10 fps
	Binning 1x2	4000 x 1500	15 fps
Acquisition Frame Rate [1] (Burst Mode)	15 fps | $t_{readout}$ = 62.7 msec (max. Res. Full Frame) @ 12 bit		
Pixel Formats	BayerRG8, BayerRG10, BayerRG12, BayerRG12p Mono8, Mono10, Mono12, Mono12p, RGB8, BGR8		
Partial Scan	True Partial Scan without increasing Frame Rate, Region of Interest (ROI) arbitrary Width: minimum 32, increment 32 Heigth: minimum 4, increment 4		
Adjustable Acquisition Frame Rate	Off or Off or 0,76 … 65535 Hz		
Acquisition Mode	Continuous, Single Frame and Multi Frame		
Acquisition Status	AcquisitionActive, AcquisitionTrigger Wait		
Exposure Mode	Timed		
Readout Mode	Overlapped, Sequential		

Image Pre-Processing

Analog Controls	Exposure Time (85 µsec … 60 sec | Step Size 1 µsec) Gain (0…20 dB), Offset (0 ... 255 LSB | 12 bit)
Auto Function	ExposureAuto and GainAuto with BrightnessAutoPriority based on BrightnessAuto ROI BalanceWhiteAuto and ColorTransformationAuto based on BalanceWhiteAuto ROI
LUT	Luminance (12 bit)
Color Models	Mono, Raw Bayer, RGB and BGR
Color Processing	Integrated color processor for high quality color calculation
Color Adjustment	Manual White Balance Automatic White Balance (Once or Continuous) based on Region of Interest (ROI)
Color Enhancement	Color Transformation to sRGB color space by optimized Matrix for 3000 K, 5000 K, 6500 K and 9500 K Lightsource or User defined Matrix
Color Tolerance	-

[1] Sensor readout, different from pixel format

[2] depends on the used interface

Digital Output: Low Active

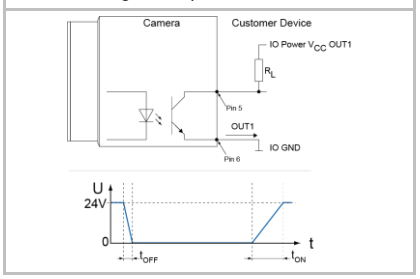

Digital Input

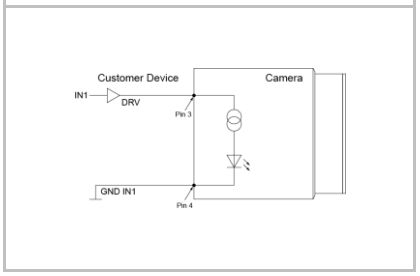

Trigger Mode: Start up time and valid Trigger

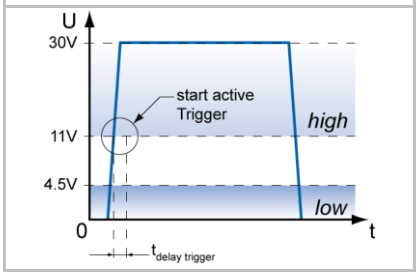

GPIO

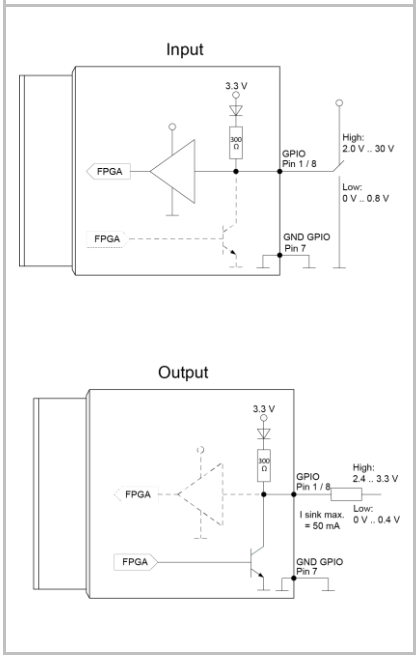

Image Pre-Processing

Binning Horizontal	1 or 2
Binning Vertical	1 or 2
Image Flipping	no
Defect Pixel Correction	via Defect Pixel List with up to 512 Pixel Coordinates
Fix Pattern Noise Correction	yes

Process Synchronization

Trigger Mode	Off (Free Running), On (Trigger)
Trigger Overlap Type	Readout
Trigger Sources	Hardware (Line0, 1, 2), Software, Counter 1, 2 End, Action CMD (Action 1), All or Off max. Trigger Delay out of $t_{readout}$: [1)] 62526 µsec / 146,6 µsec @ 12 bit (Rolling / Global Reset) max. Trigger Delay during $t_{readout}$: [1)] -
Trigger Delay	0 ... 2 sec, Tracking and buffering of up to 256 triggers
External Flash Sync	via Exposure Active $t_{delay\ flash} \leq 3$ µsec, $t_{duration} = t_{exposure}$
Encoder Function	-
PTP Function	-

Digital I/Os

Lines	Input: Line 0, Output: Line3, GPIO: Line 1, Line 2
Output Sources	Off, ExposureActive, Timer1, ReadoutActive, UserOutput 1-3 and TriggerReady
Line Debouncer	Low and high signal separately selectable Debouncing Time 0 … 5 msec, Step Size: 1 µsec

Memory

Image Buffer	35 MB 1 Images (Trigger Mode) / 1 Image (Free Running Mode)
Non-volatile Memory	128 kb

Network Interface Data

Interface	Gigabit Ethernet	1000BASE-T	1000 Mbits/sec
	Fast Ethernet	100 BASE-T	100 Mbits/sec
Ethernet IP Configuration	Persistent IP, DHCP, LLA		
Packet Size	576 … 9000 Byte, Jumbo Frames supported		

GigE Vision® Features

Events Transmission via Asynchronous Message Channel	DeviceTemperatureStatusChanged, EventLost, ExposureEnd, ExposureStart, FrameEnd, FrameStart, FrameTransferSkipped, GigEVisionError, GigEVisionHeartbeatTimeOut, PrimaryApplicationSwitch, Line0..2 FallingEdge, Line0..2 RisingEdge, TransferBufferFull, TransferBufferReady, TriggerOverlapped, TriggerReady, TriggerSkipped
Action CMD	yes, Action 1 for Trigger
Frame Counter	up to 2^{32}
Payload Size	0 … 36000212 Byte
Timestamp	64 bit, resolution in nsec, increment = 8
Packet Delay	0 .. 2^{32}– 1 nsec
Packet Resend	Resend Buffer: 69 MB (2 Images)
GigE Vision	v2.0 (v1.2 backward compatible)

[1)] Sensor readout, different from pixel format

in Assignment Data Interface

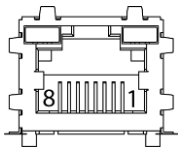

Pin Assignment Process Interface
(on camera side)

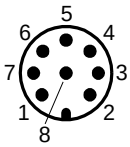

wire colors on connecting cables (ordered separately)			
1	White	5	Grey
2	Brown	6	Pink
3	Green	7	Blue
4	Yellow	8	Red

Device Temperature: T = Measurement Point

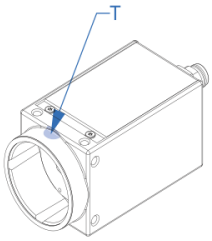

LED Signalling

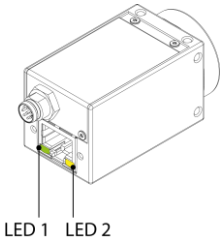

Interfaces and Connectors

Data and Power Interface	Gigabit Ethernet	Transfer Rate	1000 Mbits/sec
	Fast Ethernet	Transfer Rate	100 Mbits/sec
	Connector:	8P8C Modular Jack (RJ45), screw lock type	
	Assignment:	1 - MX1+	2 - MX1-
		3 - MX2+	4 - MX3+
		5 - MX3-	6 - MX2-
		7 - MX4+	8 - MX4-
Process Interface	Connector:	M8/8-pin (SACC-DSI-M8MS-8CON-M8-L180)	
	Assignment:	1 - GPIO (Line2)	2 - Power Vcc
		3 - IN1 (Line0)	4 - GND IN1
		5 - Power VCC OUT	6 - OUT1 (Line3)
		7 - GND (Power, GPIO)	8 - GPIO (Line1)

Caution

* Note GPIOs: Ground loops are to be avoided and can lead to destruction of the device.

Optical Data

Lens Mount	C-Mount
Optical Filter	IR cut filter

Mechanical Data

Housing	Zinc die casting, nickel-chrome-plated
Protection Class	IP40 (with mounted lens and GigE cable)
Weight	120 g
Dimensions	

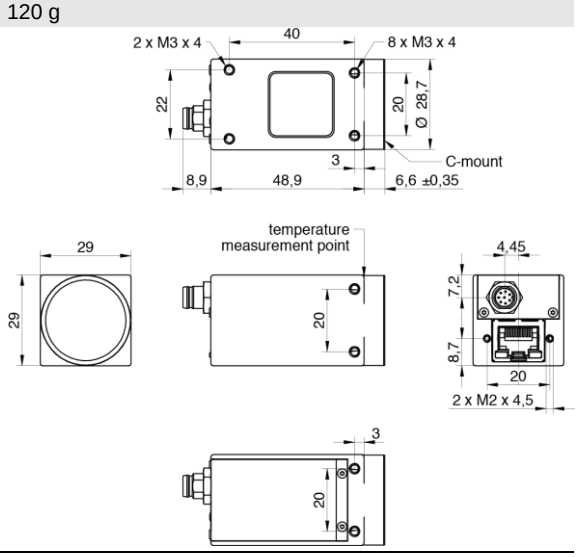

Environmental Data

Storage Temperature	-10 °C … + 70 °C
Operating Temperature	0 °C … +65 °C @ T = Measurement Point or 0 °C … +75 °C @ internal Temperature Sensor Ambient temperature above 36 °C requires heat dissipation measures.
Int. Temperature Sensor	yes, accuracy: ±2 °C (typ) -40 °C … 0°C ±1 °C (typ) 0 °C ... +85 °C
Humidity	10 % … 90 % non-condensing

53 60

LED Signalling

LED	LED 1	Green static	Link ON
		Green flash	RX active
	LED 2	Yellow static	Error
		Yellow flash	TX active

Electrical Data

Power Supply (ext.)	VCC: 12 … 24 V DC ± 20% I: 91 … 184 mA
Power over Ethernet	Class 1 device VCC: 36 … 57 V DC I: 56 mA @ 48 VDC
Power Consumption	approx. 2.2 W @ 12VDC and 10 fps approx. 2.7 W @ 48 VDC (PoE) and 10 fps (Factory Setting “Default”)
Digital Input	Optocoupler $U_{IN(low)}$: 0.0 … 4.5 VDC $U_{IN(high)}$: 11.0 … 30.0 VDC I_{IN} : 3.0 … 10.0 mA min. Impulse Length: 2.0 µsec
Digital Output	Optocoupler U_{EXT}: 5 … 30 V DC I_{OUT}: max. 50 mA t_{ON} = typ. 3 µsec t_{OFF} = typ. 40 µsec
GPIO GPIO used as Input: GPIO used as Output: Caution	direct, without optocoupler $U_{IN(low)}$: 0.0 … 0.8 VDC $U_{IN(high)}$: 2.0 … 30.0 VDC min. Impulse Length: 2.0 µsec $U_{Out(low)}$: 0.0 … 0.4 VDC ($I_{sink\ max}$: 50 mA) $U_{Out(high)}$: 2.4 … 3.3VDC (I_{max} : 1 mA) * The General Purpose I/Os (GPIOs) are not potential-free and do not have an overrun cut-off. Incorrect wiring (overvoltage, undervoltage or voltage reversal) can lead to defects in the electronic system. Ground loops are to be avoided and can lead to destruction of the device.

Conformity

Conformity	CE, RoHS, REACH
KC Registration No. / Date	- / -
MTBF	62 years @ T = 45 °C / 40 years @ T = 60 °C T = Measurement Point

GenICam™ Features

Short Exposure Range	-
Timer	Timer Selector: Timer 1 TimerTriggerSource: Line0, SoftwareTrigger, ExposureStart, ExposureEnd, FrameTransferSkipped, TriggerSkipped, Action 1 and Off TimerDelay: 0 µsec … 2 sec, Step Size: 1 µsec TimerDuration: 4 µsec … 2 sec, Step Size: 1 µsec
Counter	Counter Selector: Counter 1, Counter 2 CounterValue: 0 … 65535 Counter Event Source: Counter1End or Counter2End, ExposureActive, FrameTransferSkipped, FrameTrigger, TriggerSkipped, Line0..2 and Off Counter Reset Source: Counter1End, Counter2End, Line0..2
Sequencer	Sequencer Characteristics: up to 128 sets, up to 4 possible pathes for triggered set transitions, 6 trigger sources: Counter1End, Counter2End, ExposureActive, Line0..2, ReadoutActive, Timer1End Sequencer Parameters for Exposure, Gain, Trigger, ROI and Output: ExposureTime, CounterDuration, CounterEventActivation, CounterEventSource, CounterResetSource, ExposureMode, ExposureTime, Gain, Height, OffsetX, OffsetY, TriggerMode, UserOutputValue, UserOutputValueAll, Width

GenICam™ Features

User Sets	Factory Settings: UserSet0 (read only) Freely Programmable: UserSet1, UserSet2, UserSet3 Parameters: any user definable Parameter
Acquisition Abort	Delay up to 62.7 msec
Chunk Data	yes, Chunk Selector: Binning, BlackLevel, CounterValue, DeviceTemperature, ExposureTime, FrameID, Gain, Height, Image, ImageControl, LineStatusAll,OffsetX, OffsetY, PixelFormat, SequencerSetActive, Timestamp, Width
Device Temperature	InHouse Event generation for Normal to High, High to Exceeded and Exceeded to Normal Exceeded (no image transfer) = max. internal temperature sensor + 1 °C
Device Link Throughput Limit	yes, up to max. Device Link Speed
Custom Data	yes, 128 Byte
SFNC Version	v2.4

Factory Settings after Start-Up

Ethernet IP Configuration	
Trigger Mode	Off (Free Running)
Analog Controls	Exposure Time: 4 msec, Gain: 0 dB, Offset: 0
Pixel Format	BayerRG8
Partial Scan	Off
Acquisition Frame Rate	Off
Timer/Counter/Sequencer	Off
Defect Pixel Correction	ON
Fixed Pattern Noise Correction	-
Digital Input	Line0, invert = false
Digital Output	Line3, invert = false, line source = Off
GPIO 1/2	Line1, Line2, invert = false, LineMode = Input
TriggerSource	All

Partial Scan @ FullFrame, min Exposure, Mono8 (monochrome camera) or BayerRG8 (color camera)

Resolution		max. fps acquisition	max. fps interface [2)]
UHD (4K)	3840 x 2160	14,7	14,7
Full HD	1920 x 1080	16,0	16,0
SXGA	1280 x 1024	16,0	16,0
HD720	1280 x 720	16,0	16,0
XGA	1024 x 768	16,0	16,0
SVGA	800 x 600	16,0	16,0
VGA	640 x 480	16,0	16,0
CIF	352 x 288	16,0	16,0
QVGA	320 x 240	16,0	16,0
QCIF	176 x 144	-	-
LineScan	4000 x 2048	14,8	14,8
	4000 x 1024	16,0	16,0
	4000 x 512	16,0	16,0
	4000 x 256	16,0	16,0
	4000 x 128	16,0	16,0
	4000 x 64	16,0	16,0
	4000 x 32	16,0	16,0
	4000 x 16	16,0	16,0
	4000 x 8	16,0	16,0
	4000 x 4	16,0	16,0
	4000 x 2	-	-
	4000 x 1	-	-

[2)] depends on the used interface